एग्रीकांप्लेक्स संवाद-पत्र

Agricomplex Newsletter

ICAR Research Complex for NEH Region, Umiam

Vol. 32 No. 1 April - September 2017

Research Highlights

Laboratory testing of automatic control system for drip irrigation

Irrigation is one of the major agricultural operations in which considerable amount of water is lost during movement from its source to destination and at the time of its application. Traditional irrigation has efficiency of 30-40% however, with the adoption of drip irrigation system, it can go up to 90%, also labour required in monitoring and controlling irrigation can be reduced to a great extent. Automatic control system consists of 'Microcontroller ATmega 16A' as the computing unit and resistance type 'Soil Moisture Sensor' (SMS) to determine moisture content in the soil, which generates different voltage for different soil moisture contents. The generated voltage signal is fitted as input to the microcontroller, which decides whether to 'ON' or 'OFF' the water pump of the irrigation system (Fig. 1).

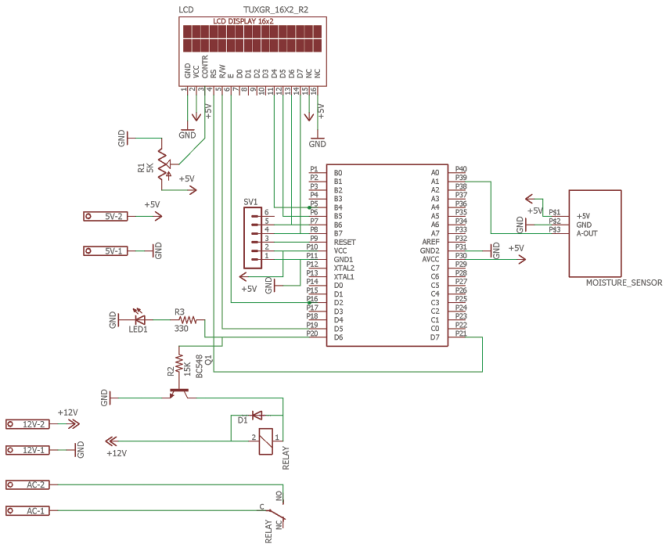

Fig 1. Circuit diagram of automatic control system for drip irrigation

Contd. to page 2

Development of location specific technology for cultivating *Shiitake* mushroom on saw dust in 90 days

Shiitake mushroom (*Lentinula edodes*) is world renowned as a medicinal mushroom with proven health benefits in traditional medicine. It grows naturally on decaying wood of deciduous species in South East Asia. In Manipur, *Shiitake* mushroom is usually collected and gathered from the wild and being a wood mushroom, its cultivation using traditional conventional methods takes a long time to harvest, sometimes a year or more.

A technology was developed for the cultivation of *Shiitake* mushroom on artificial wood substitutes (made of saw dust from broad leaved hard wood trees and 20% rice bran substrate). *Shiitake* spawn was prepared on paddy grains and grown over artificial wood substitutes, this substrate was treated with 1% $CaCO_3$ (dry weight basis) and filled in

Contd. to page 2

from page 1

Laboratory testing of automatic .....

The automatic control system requires two voltage sources, i.e. 6V and 12V wherein the overall current consumption is 180mA. In order to calibrate the soil moisture sensor, soil samples were collected from the field, then different quantity of water was added to the soil samples (in order to maintain different soil moisture content) and kept in oven for 24hrs. These soil samples were kept in room temperature for another 24hrs (Fig. 2).

Fig 2. Soil samples maintained at different moisture contents

An algorithm was developed to calibrate the SMS coded in C language in Code Vision AVR software which was transferred to ATmega 16A through a programmer. After taking reading of different soil samples, they were kept in oven for 24hrs to determine the moisture content (Fig. 3).

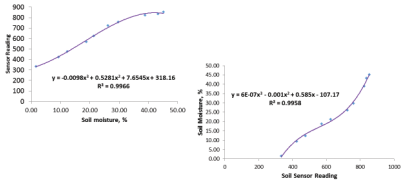

Fig 3. Variation of soil moisture content by sensor reading

The results showed that the sensor could not detect soil moisture content beyond 45% as the sensor considered this level as saturated. Thus, the sensor gave the same output for any increase in water content beyond 45%. As per literature, available moisture to the crop i.e. between permanent wilting point to field capacity is in the range of 10-20% for sandy loam soil and 20-40 % for clay loam soil. The soil texture under study was sandy clay loam soil so, the range of moisture content detected by the sensor was found to be within the desired range.

Another algorithm was also developed based on the calibration curve in such a way that the system would switch ON the electric motor when the moisture content was 25%, which would remain ON until the moisture content of the soil reaches 35% and then, the system would switch OFF the electric motor when the soil moisture reaches 25%. This system was tested on seven soil samples at different moisture contents by using electric motor (2.5 kW) which is shown in Fig. 4.

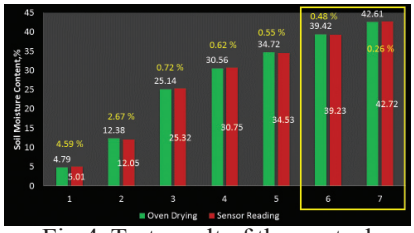

Fig.4. Test result of the control system

From the study, it was found that within the desired operating range (25-35%), the deviation in soil moisture detected by the sensor was in the range of 0.55-0.72%. At lower soil moisture contents of 5 and 12%, the deviation detected by the sensor was 4.59 and 2.67%, respectively which were higher from the desired soil moisture. It is therefore concluded that the automatic irrigation system could be operated to maintain soil moisture in the range of 25-35% for crop production.

H Dayananda Singh, Hijam Jiten Singh and BK Sethy* *dayamangang@gmail.com

from page 1

Development of location .....

polyproplylene (PP) bags. After 2-2.5 months of spawning, PP bags were removed and blocks were dipped in chilled water (4-5°C) for 10 minutes. Using this new technology, fruiting started at 3-4 days after chilling treatment. On an average, total time taken from spawning to first harvest was 75-82 days as compared to the 360 days taken when grown on wood logs (conventional method). Two strains performed best in the temperature range of 24-27°C (during fruiting period) under Manipur conditions. The technology was demonstrated at farmer's field during 2016-17 winter/spring seasons and percolated through KVKs, which has popularized it in hill areas of Manipur wherein 12 farmers have adopted this technology.

SK Sharma, Arati Ningombam, TH Surjit Singh and N Prakash*
*susheelsharma19@gmail.com

Production potential of sunflower varieties in rice-sunflower-*Sesbania* (green manure) cropping system under organic management conditions in mid hills of Sikkim

Due to low productivity of rapeseed and mustard in Sikkim, there is a deficit of 3500 MT (64%) of oilseed in the state. Considering the resident and floating population, arises the need to exploit domestic resources to maximize production for ensuring edible oil security. Sunflower (*Helianthus annuus* L.) has a high yield potential and oil content as compared to mustard, containing 45-50% good quality oil and protein in cake. In Sikkim, it is recommended for cultivation in the month of November after the harvest of *kharif* rice hence, it is necessary to select high yielding short duration sunflower variety which can fit in the rice-based system. Keeping these in view, the present study was undertaken at ICAR= Research Farm, Tadong with the objective of screening high yielding sunflower varieties suitable under organic management conditions in rice-sunflower-*Sesbania* (green manure) cropping system.

Data (Table 1) revealed significant effect of sunflower varieties with respect to plant height (cm), days to maturity, head diameter (cm), test weight (g) and seed yield (t ha^{-1}). The plant height of KBSH-41 was significantly higher followed by KBSH-44 and DRSF-113. KBSH-44 and DRSF-113 (133 days) took minimum days for maturity while KBSH-41 took maximum days (138 days). Head diameter and test weight of LSFH-171 (19.4 cm) was significantly higher. The variety KBSH-41 gave the highest seed yield (2.25 t ha^{-1}) as compared to other varieties. The increase in the yield of KBSH-41 might be due to combined effect of all the growth and yield contributing characters.

Table 1. Performance of sunflower varieties under organic management condition in mid hills of Sikkim

Variety/ Hybrid	Plant stand (000 ha^{-1})	Plant height (cm)	Days to Maturity	Head diameter (cm)	Test weight (g)	Seed yield (t ha^{-1})
KBSH-41	55.5	174.6	138.0	18.6	70.1	2.25
KBSH-44	55.5	164.7	133.0	18.8	65.2	1.49
KBSH-53	55.5	132.4	137.0	12.2	58.2	1.52
DRSH-1	55.5	134.9	134.0	15.5	76.3	1.97
DRSF-113	55.5	157.3	133.0	9.7	77.1	1.78
LSFH-171	55.5	145.8	135.0	19.4	78.4	1.84
SEm±	—	2.7	1.2	0.6	1.1	0.01
LSD (P=0.05)	—	8.5	3.9	2.0	3.4	0.03

Raghavendra Singh, Subhash Babu, RK Avasthe, SK Das and Puscal Sharma*
*raghavenupc@gmail.com

Diversification of maize (*Zea mays* L.) based cropping sequence through *in-situ* moisture conservation in rain-fed ecosystem of Sikkim Himalayas for improving system productivity and use efficiency under organic management

Maize is an important food grain grown in Sikkim, however the productivity of rain-fed mono-cropping system of Sikkim is very low therefore, intercropping of maize with leguminous crops may improve the soil health and also maintain the system productivity by providing additional yield. *In-situ* moisture conservation practice during winter season, by retention of previous harvest along with weed biomass helps in increasing soil moisture. Similarly, short duration drought tolerant winter season crops may also help escape the drought during winter and enhance the cropping intensity.

Comparing the total productivity of diversified cropping systems in terms of maize grain equivalent yield (MEY), significantly higher MEY was recorded with maize+cowpea-vegetable pea (18.23 t/ha) followed by maize+cowpea-rajmash (10.60 t/ha). This difference was mainly due to the higher amount of produce and higher selling price realized for these crops in the market. Similarly, maximum (49.96 kg/ha/day) system production efficiency (SPE) was recorded with maize+cowpea-vegetable pea system followed by maize+cowpea-rajmash system (29.05 kg/ha/day). Relative production efficiency (RPE) *i.e.*, the capacity of the system for production in relation to existing system was maximum (506.83%)

Contd. to page 4

Evaluation of oyster mushroom (*Pleurotus* sp.) strains

Four strains of *Pleurotus* sp. (PL-16-01,02,03 and 04) were evaluated at Barapani (Umiam). Grain spawn was prepared using wheat, straw was presoaked for 2 hours and for substrate treatment: Hot water treatment was done for 30 min, substrate quantity (straw) used was 1 kg dry wt. (with 70% moisture)/bag, six replication each with 8 bags were kept in mushroom house for evaluation. Results revealed that strain Pl-16-02 was the best performer with yield of 51.52 kg/100kg dry substrate followed by strain Pl-16-01 (Table 1).

Table 1 Evaluation of oyster mushroom (*Pleurotus* sp.) strains

Strains	PL-16-01	Pl-16-02	PL-16-03	Pl-16-04
Yield (kg/100 kg dry substrate)	49.69	51.52	46.44	42.08
Time taken for first harvest (days)	21.6	20.1	21.7	31.7
Yield CD (5%)=1.24				

Pankaj Baiswar pbaiswar@yahoo.com

Mushroom map of Meghalaya

Meghalaya has eleven districts *viz*. West Garo Hills (Tura), East Garo Hills (William Nagar), South West Garo Hills (Ampati), South Garo Hills (Baghmara), South West Khasi Hills (Mawkyrwat), West Khasi Hills (Nongstoin), East Khasi Hills (Shillong), RiBhoi (Nongpoh), West Jaintia Hills (Jowai), East Jaintia Hills (Khliehriat), North Garo Hills (Resubelpara). The information has been compiled on the basis of reports of various researchers records (mainly from ICAR Research Complex for NEH Region, Umiam, Meghalaya) and also from authors own record and has been used for making mushroom map of Meghalaya.

There are several genera have been reported from various localities of Meghalaya. Among them molecular identification and confirmation has also been done using ITS for following specimens- *Polyporus tenuiculus KC951263, Polyporus auricularius KF 179532, Calvatia sp. KJ531418, Termitomyces sp. KF227896, Laccaria sp. JX843418, Vascellium sp. JX843416, Coprinopsis sp. JX403721, Pleurotus sp. JX 403720, Lyophyllum sp. JX 843419, Laccaria sp. JX843417, Lactarius sp. KF227894 and Lyophyllum sp. KF227895*

*PankajBaiswar**
*pbaiswar@yahoo.com

from page 3

Diversification of maize....

with maize+cowpea-vegetable pea system followed by maize-rajmash sequence (253.75%). Land use efficiency (LUE), the indicator of land utilization in temporal dimension for cropping activity was higher for the maize+cowpea-barley system (76.44%) followed by maize+cowpea-toria (61.64%). This was due to longer crop duration which in turn recorded the highest LUE and efficient utilization of land over other systems. *In-situ* moisture conservation measures also showed significant effect on MEY, SPE, RPE and LUE. Maize stover+weed biomass application recorded significantly higher MEY (9.74 t/ha) and accordingly with respect to SPE, RPE and LUE. The *in*-situ moisture conservation measures provided higher soil moisture up to later stage of crop and hence, gave higher yield which is reflected in system productivity and use efficiency.

Table 1. Effect of crop diversification and in-situ moisture conservation measures on maize equivalent yield (MEY), system production efficiency (SPE), relative production efficiency (RPE) and land use efficiency (LUE)

Treatment	MEY (t/ha)	SPE (kg/ha/day)	RPE (%)	LUE (%)
Cropping systems				
Maize-fallow	3.00	8.21	—	33.8
Maize+cowpea-toria	6.70	18.36	124.2	61.6
Maize+cowpea-buckwheat	6.21	17.01	107.7	55.9
Maize+cowpea-barley	7.14	19.56	138.1	76.4
Maize+cowpea-vegetable pea	18.23	49.96	506.8	59.8
Maize+cowpea-rajmash	10.60	29.05	253.8	60.5
SEm±	0.13	0.35	7.73	0.06
LSD (P=0.05)	0.40	1.10	24.4	0.19
***In-situ* moisture conservation measures**				
Control	7.35	20.13	169.0	57.8
Maize stover	8.85	24.25	180.6	58.1
Maize stover + weed biomass	9.74	26.69	215.6	58.2
SEm±	0.06	0.16	3.73	0.05
LSD (P=0.05)	0.17	0.46	10.8	0.15

Raghavendra Singh, Subhash Babu, RK Avasthe, R Gopi and SK Das*
* raghavenupc@gmail.com

Success Stories

Entrepreneurship development through beekeeping in Meghalaya - a success story

Mr. Stephan Shadap, a Beekeeper in Nonthymmai Village, Ri-Bhoi district, Meghalaya, started the bee keeping with only two boxes in 2014 with help of ICAR Research Complex for NEH Region, Umiam, Meghalaya. He received hands on training and practical exposure to bee-keeping from Division of Crop Protection, ICAR, Umiam under Tribal Sub Plan (TSP) programme. At present he is having total 80 bee boxes for production of honey and nucleus colony. Total production of honey from these boxes is about 480 kg/ year. Income from honey is Rs. 240000/- per year (selling rate @ Rs 500/kg of honey). Since Mr. Shadap is a trained bee keeper, he also maintains and sells nucleus colony to other bee-keepers @ Rs. 1000/colony and earns additional income of Rs. 50,000/- per year. Depending upon the climatic conditions, health of the colony and demand of the honey and nucleus colonies his earning from beekeeping varies from 2 to 3 lakhs per annum. Mr. Shadap is most successful bee-keeper and ambassador in Ri-Bhoi district of Meghalaya and has set a very good example in this district.

Mr. Shadap with bee colonies and final product

Sandip Patra, G. T.Behere, D. M. Firake and S. Hazarika;* *sandippatra47@gmail.com

ICAR Nagaland centre with ICAR-NRC Litchi organized training on good agricultural practices (GAP) in litchi

ICAR Nagaland Centre and ICAR-National Research Centre (NRC) in Litchi, Muzaffarpur, Bihar jointly organized a three-day training programme on 'Good Agricultural Practices (GAP) in Litchi' from 3rd to 5th August, 2017 under Tribal Sub Plan and NEH component of ICAR-NRC Litchi. The training was a follow up of the project for promotion of litchi cultivation in Nagaland.

During the training, detailed theoretical and practical sessions were held on litchi cultivation with respect to successful orchard establishment, nursery raising and propagation, canopy management, integrated pest disease and post-

Contd. to page 6

Extension activities

ICAR-KVK, Ranipool demonstrates year round vegetable production under low cost poly tunnel

Production of off-season vegetables under protected conditions has the potential to become a profitable business where temperature and moisture is controlled for growth of various specific vegetables. The low cost poly tunnel is economical for small and marginal farmers who cannot afford huge cost of high-tech poly house, as the land holding size of the farmers is decreasing due to family fragmentation and there is a need to increase the productivity on their available land. Therefore, KVK-East Sikkim, ICAR-NOFRI, Ranipool in coordination with ATMA East Sikkim organized three-day long training cum demonstration programme on sequential vegetable cultivation under low cost poly tunnel system from 6-9th September, 2017 at Thanka-Yangtang, East Sikkim. Around 52 vegetable growers, representatives of SHG and individual progressive farmers attended the programme. Joint Director, ICAR-NOFRI encouraged the farmers to undertake poly tunnel system with good agricultural practices and urged the farming community for adoption of the Government of India schemes *viz*., PMFBY, PMKSY, PKVY and soil health card, etc.

Fig 1. Demonstration of low cost poly tunnel for year round vegetable cultivation

ICAR-NOFRI organized 15 days training program on organic production of horticultural crops

Fifteen days (23rd May to 6th June, 2017) training programme on 'Organic production of horticultural crops in Sikkim' was organized for the Village Level Workers (VLW) to update them regarding the latest organic production technologies and also for rapid transfer of ICAR-NOFRI technologies at the grass root level. Eight VLWs, two from each district of Sikkim participated in the training program which was sponsored by Horticulture and Cash Crop Development Department, Government of Sikkim under Mission for Integrated Development of Horticulture (MIDH) scheme. Shri. Khorlo Bhutia, Secretary; Shri D. K. Bhandari, Director; Shri. K. T. Bhutia, Director and Shri. K. B. Pant, Additional Director from the Department of Horticulture and Cash Crop Development, Government of Sikkim graced the occasions during the training programme and emphasized on the successful implementation of MIDH schemes and sustainable development of horticultural production systems.

Fig 1. Chief Guest, Shri. Khorlo Bhutia releasing a training manual

During the training, trainees were apprised on the concept of physico-chemical and microbiological properties of soil and it's health; Organic nutrient management, farming production standards, agronomic practices of major field crops, production technologies of fruits especially Sikkim mandarin and kiwifruit, intensive vegetable production techniques under low cost plastic tunnels and rain shelters, production of red cherry/pepper/ginger/turmeric/large cardamom; role of agro-forestry systems in organic farming; organic pest and disease management; nursery raising techniques and importance of traditional horticultural crops in organic crop production; postharvest management of horticultural crops; importance of SHGs for upliftment and women empowerment; Floriculture- A profitable venture in organic production system; backyard poultry/goat production/dairy cattle management/pig production and their role in organic farming. Also, hands on experience and practical demonstrations were conducted for mushroom production technology, vermi-composting, plant propagation techniques, hand pollination techniques of kiwifruit, preparation of bio-pesticide and bio-fungicide solutions, development of value added products, etc.

Fig 2. Chief Guest, Joint Director, Scientists and SMSs with the trainees

from page 5

ICAR Nagaland centre.....

harvest management. Altogether 54 farmers from Peren, Dimapur, Kohima and Wokha districts participated in the training. Publications on 'Improved technologies in litchi production' and 'Month-wise activities for litchi cultivation' were also released by the Director, ICAR-NRC on Litchi during the programme.

Empowerment of North Sikkim tribal farmers through ICAR-NOFRI technologies

ICAR-NOFRI organized a three-day practical training programme for the tribal farmers of Chungthang, Rabom, Lachen and Thangu villages, North Sikkim during 8-10th May, 2017 under TSP, MIDH and NMSHE project. Forty eight farmers participated and benefitted from ICAR technologies and inputs were distributed *viz*., weaned piglets, essential veterinary medicines and feed supplements, plastics for low cost tunnels, untreated seeds, biopesticides, biofungicides, mushroom spawn and mushroom bags. Ten model deep litter housing were also constructed at earlier farmer's field. During the program, Dr. R. K. Avasthe, Joint Director, ICAR-NOFRI, Tadong, Gangtok urged the farmers to adopt agri-horti production techniques. Further, he also highlighted the importance of animal husbandry with special emphasis on deep litter housing system, and the farmers were encouraged to tap the opportunities prevailing in the area like heavy deployment of armed forces and rising tourism as potential markets. The farmers were suggested to promote indigenous food amongst tourists and locals. Adoption of the integrated farming system on community basis to meet the demand locally and subsequently for livelihood improvement was also proposed. Low cost tunnel technology under field conditions was also demonstrated at Rabom and Lachen, North Sikkim. At Thangu, North Sikkim, the ICAR-NOFRI team interacted with the potato growers and suggested the scientific potato growing techniques for better production.

Fig 1. Dr. R. K. Avasthe, Joint Director, ICAR-NOFRI addressing the tribal farmers at Theng, Chungthang, North Sikkim

Fig 2. Distribution of inputs to tribal farmers of Lachen, North Sikkim

Fig 3. Distribution of weaned piglets to the tribal farmers of Theng, Chungthang, North Sikkim

Fig 4. Field demonstration of construction of low cost plastic tunnels at Lachen, North Sikkim

Events

KVK Kiphire, Nagaland foundation stone laid

On 7th September, 2017, foundation stone of KVK Kiphire at Longtroktrok, Kiphire district was laid by Shri. T. Torechu, MLA, Kiphire-Pungro constituency and unveiled a farmer's fair cum exhibition programme. This is the 11th KVK in the state of Nagaland. In his address, Shri Torechu said that the coming up of KVK was a boon for the people of Kiphire district bound to improve the farming community and help agricultural output in the region. Earlier, Dr. D. J. Rajkhowa, Joint Director, Nagaland Centre welcomed all the dignitaries and highlighted the role of KVKs for agricultural development. Dr. S. V. Ngachan, Director ICAR-RC-NEHR, Umiam; Dr V. P. Chahal, ADG (Agril. Ext.) ICAR, New Delhi; Dr. B. C. Deka, Director, ATARI Zone-VII; Shri. Imkonglemba, APC and Commissioner and Secretary, Agriculture, Government of Nagaland; Shri. M. K. Mero, Commissioner and Secretary, Veterinary and Animal Husbandry, Government of Nagaland; Shri. Sedevikho Khro, Deputy Commissioner, Kiphire; Scientists of ICAR Nagaland centre and Officials from different state

Contd. to page 8

ICAR-NOFRI organized training cum awareness programme on organic horticultural crop production

In continuation with the dedicated efforts for self reliance in horticulture, ICAR-NOFRI organized 'Training cum awareness programme on organic horticultural crop production' with special emphasis on Lilium production for the tribal farmers under MIDH and TSP project at Timpyem village, East Sikkim on 4th May, 2017. Twenty seven farmers participated and showed keen interest in learning the Lilium production techniques. Dr. R. K. Avasthe, Joint Director, ICAR-NOFRI emphasized on the importance of Lilium as the most valuable flower for commercial production as it fetches a good price in the market with the climatic conditions of Sikkim also being congenial for Lilium production. The the bulbs of Oriental and Asiatic Hybrid (LA) Lilium were also distributed to the farmers.

from page 7

KVK Kiphire, ...

Fig 1. Foundation stone laying on 7th September, 2017

departments graced the occasion. Various critical farm inputs were also distributed to more than 500 farmers who attended the event.

Field day cum farmer-scientist interaction programme on pulse cultivation organized by Nagaland Centre

In order to popularize the scientific pulse cultivation in Nagaland, a field day cum farmer-scientist interaction programme on pulse cultivation was conducted at ICAR, Nagaland Centre on 8th June, 2017. Shri Zhaleo Rio, MLA, Ghaspani-II, graced the occasion as the Chief Guest and inaugurated the event in the presence of Professor R. C. Gupta, Dean, NU-SASRD; Dr. Lallan Ram, Director, CIH; Captain G. Dhananjaya Rao, Dean, Veterinary College, CAU; Shri. Hemant Kumar, Commandant BSF, 93rd Battalion, Kohima and other dignitaries from various departments. Dr. D. J. Rajkhowa. Joint Director, Nagaland Centre welcomed the dignitaries and highlighted the need for increasing the cropping intensity by cultivating pulse crop, especially in the rice

Fig 1. Chief guest Shri. Zhaleo Rio distributing input to farmer

fallow. A farmer-scientist interaction programme was also held wherein resource persons from ICAR Nagaland Centre; Bio-control Lab, Medziphema; NRC on Mithun; KVK Longleng and KVK Dimapur addressed the problems raised by the farmers. More than 253 farmers from different regions of the state attended the programme and various critical farm inputs were also distributed to the farmers.

ICAR-KVK, Ranipool organized animal health camp

In order to extend a helping hand to the livestock farmers of Thanka and Yangthang villages, day-long Animal Health Camp cum awareness programme was organized at Yangthang village of East district of Sikkim under the National Innovations on Climate Resilient Agriculture (NICRA) project with an objective to create awareness on animal health as well as administering necessary treatments to their livestock. More than 52 farmers from Thanka and Yangthang villages attended the

Fig 1. Interaction with the livestock farmers

camp and received treatment for their livestock, which included a total of 55 cattle, 44 goats, 25 pigs and more than 200 poultry birds.

ICAR-NOFRI organized maize day cum farmer-scientist interaction

The productivity of maize in Sikkim (1.75 t/ha) is low and keeping the importance of maize in view, ICAR-NOFRI, Tadong has undertaken research to develop location specific technologies to address farmers concern for more than four decades now. Presently, ICAR-NOFRI is working on several aspects of maize to address the problems related to climate change. Therefore, Maize Day was organized to showcase the technologies to the state government officials and farming community of Sikkim on 20th July, 2017. Dr. Senthil Kumar, IFS, Special Secretary, RM&DD, Government of Sikkim graced the occasion as the Chief Guest and Dr. Yashoda Pradhan, Chief Executive Officer, SSOCA, Government of Sikkim was the Guest of Honour. Also present at the function were Smt. S. L Dorjee, Director (Agriculture), FSADD; Smt. Asha Lama, Director, SAMETI; Smt. Bina Rai, Deputy Director, FSAD; Shri. Palden, SSOCA; scientists and SMSs of ICAR-NOFRI and KVK East Sikkim. More than 100 farmers were also present in the programme.

Fig 1. Chief Guest, Dr. P. Senthil Kumar, IFS, Special Secretary, RMDD, Govt. of Sikkim addressing to the farmers

ICAR-NOFRI organized Sankalp Se Siddhi programmme

ICAR-NOFRI in collaboration with KVK East Sikkim organized Sankalp Se Siddhi-New India Manthan on 30th September, 2017 with an objective to double Farmers' income by March, 2022. The programme was inaugurated by Chief Guest, Shri. Somnath Poudyal, Hon'ble Minister of FSADD & AHLFVS in the presence of Guest of Honour, Shri. P. D. Rai, Hon'ble MP Lok Sabha; Smt. Anjana Lama, General Manager, NABARD, Sikkim; Shri. D. K. Bhandari, Director, H&CCDD, Government of Sikkim and Dr. R. K. Avasthe, Joint Director, ICAR-NOFRI, Tadong. The Chief Guest said that Government of Sikkim is actively adopting the Prime Minister's vision for doubling the farmer's income by 2022 and appreciated the initiatives taken by ICAR-KVK, East Sikkim in the field of soil health management by distributing more than 400 soil health cards to farmers. Shri. P. D. Rai, led the Sankalp Se Siddhi pledge of the farming community, state government officials, scientists and SMSs. He also encouraged the farmers to approach financial institutions to get their crops insured under PMFBY, to reap benefits of PMKSY and other government schemes. Smt. Anjana Lama, General Manager NABARD, Sikkim detailed on Kisan Credit Card (KCC). During the programme, Agriculture Kisan Film and ICAR-NOFRI research and development activities for doubling the farmer's income recorded by Doordarshan Kendra, Gangtok was projected to the farming community. About 176 farmers and dignitaries from line departments participated.

Fig 1. Chief Guest, Hon'ble Minister of Agriculture Shri. Somnath Poudyal and other dignitaries taking oath

Superannuation

Dr. Satish Chandra, Principal Scientist and Head, Division of Crop Protection, ICAR RC for NEH Region, Umiam superannuated on 30.04.2017 after spending his entire career in Northeast. He had served the Institute in various capacities, guided and mentored several scientists. He had basically been associated with groundnut, soybean and maize pathology and also with mushroom research. He has contributed in development of several plant protection technologies like single spray for managing early leaf spot of groundnut, etc. He has acted as Chairman for PEQ certification in Meghalaya and also in several committees of state government. He was the Organizing Secretary for Exhibition-Cum-Workshop on Traditional Farming and Indigenous Foods of North East (25-27 Feb, 2017). He has more than 80 research articles to his credit along with many popular articles and book chapters. He has also taught many courses and guided five students as major advisor in M.Sc. (Plant Pathology), CAU, Barapani and several others as minor advisor. He can be contacted at email address- satishbarapani@ rediffmail.com

Productivity maximization and quality improvement of kiwifruit through canopy management and crop regulation in mid hills of Arunachal Pradesh

An investigation was undertaken in mid hills condition of Arunachal Pradesh to study the effect of hand thinning of fruitlets on fruit size, yield and quality of kiwifruits cv. Allison. Eight to nine year old kiwifruit vines were selected at Sago village, West Siang district (1250 meters above msl). Uniform cultural practices and plant protection measures were followed in all the vines and timely tagging of fruitlets were done based on the treatments. The vines were subjected to hand thinning at different severities *viz.* retaining 2 fruitlets per fruiting shoots + canopy management (T_1), 4 fruitlets per fruiting shoots + canopy management (T_2), 6 fruitlets per fruiting shoots + canopy management (T_3), no fruit thinning + canopy management practices (T_4) and no fruit thinning + no canopy management (T_5) as control. The data (2015-18) of the study revealed that hand thinning of fruitlets was found effective in enhancing the fruit size and weight which significantly improved with increasing severity of hand thinning. Hand thinning retaining 2 fruitlets per fruiting shoots (T_1) recorded the maximum fruit length (7.21 cm), breadth (5.35 cm) and weight (83.69 g). However, the total fruit yield and number of fruits decreased with an increase in the intensity of hand thinning. Similarly, the production of 'A' grade fruits increased and 'B' and 'C' grade fruits decreased as the intensity of hand thinning were increased. Although, the highest total yield (31.94 kg/vine) was exhibited in control, the yield of 'A' grade fruits was least (8.88 kg/vine) resulting in the lowest net profit (Rs. 1241/- per vine). Thinning to retain 6 fruitlets per fruiting shoots (T_3) resulted in optimum thinning and maximum production of 'A' grade fruits (23.48 kg/vine) of better quality in terms of *viz.* total soluble solids, total sugars, ascorbic acid (Table 1) with highest net profit of Rs. 1790/- per vine over other treatments.

Table 1. Effect of hand thinning of fruitlets and canopy management on quality of kiwifruit cv. Allison

Treatments	TSS (°Brix)(%)	Acidity	Total sugar (%)	Ascorbic acid (mg/100 g)
T1	**13.92**	**0.62**	**10.82**	82.28
T2	13.16	0.69	10.03	**82.87**
T3	13.22	0.68	9.69	79.52
T4	11.61	0.84	8.91	69.97
T5	11.22	0.91	8.51	67.50
SEm±	0.14	0.02	0.30	0.95
$CD_{(0.05)}$	0.43	0.05	0.89	2.84

T. Angami*, H. Kalita, J. Kumar and A. Chandra *thejaangami@yahoo.com

Promotion

Name	Discipline/ Designation	Centre	Date of promotion
	Administrative		
Smti. F. B. Lynser	AAO	Hqs. Umiam	16.08.2017
Smti. Minti Sharma	AAO	Hqs. Umiam	16.08.2017
Smti. Manosha Warjri	AAO	Hqs. Umiam	14.08.2017
Smti. Imlimenla	AAO	Hqs. Umiam	16.08.2017
Smti. T. Pattanayak	AAO	Hqs. Umiam	14.08.2017
Shri. Ninda Yolmo	AAO	Hqs. Umiam	16.08.2017
Smti. Manju Dural	AAO	Hqs. Umiam	16.08.2017
Smti. M. Lalthangsei	P. S.	Hqs. Umiam	16.08.2017
Shri. B. R. Borah	Assistant	Hqs. Umiam	14.08.2017
Smti. Sabina Pradhan	PA	Hqs. Umiam	16.08.2017
Shri. Sun Bahadur Rai	LDC	Hqs. Umiam	14.08.2017

Joining

Name	Designation & discipline	Institute of transfer	Date of joining
	Scientific		
Dr. Bagish Kumar	Scientist	ATARI, Umiam	01.04.2017
Dr. Balusamy A	Scientist	NIASM, Baramati	01.04.2017
Dr. L. Joymati Chanu	Scientist	ARS new Appointment	15.04.2017
Dr. K. K. Baruah	Pr. Scientist	NRC on Pig	02.06.2017
Mrs. Rumki H. Ch. Sangma	Scientist	NRC on Orchid	04.07.2017
	Administrative		
Shri. Prashant Kumar	Sr. FAO	IISS, Bhopal	05.04.2017
Shri. Parimal Ghosh	AO	Sikkim	01.07.2017
Shri. Saurajyoti Chakraborty	Assistant	Direct Recruitment ASRB	11.08.2017

Transfer

Name	Designation	From	To	Date of release
		Scientific		
Dr. A. K. Tripathi	Pr. Scientist, HOD SS	Hqs. Umiam	ICAR-ATARI, Guwahati	09.05.2017
Shri. Rahul Das	Scientist (Aquaculture)	Arunachal Pradesh	ICAR-CIFRI, Barrackpore	01.04.2017
Dr. Sudhir Kumar	Scientist (Genetics & Plant Breeding)	Manipur	ICAR-IIAB, Ranchi	30.06.2017
Shri. Bheeru Lal Meena	Scientist (Plant Breeding)	Tripura	ICAR-DRMD, Bharatpur	29.06.2017
Dr. K. Rajasekar	Scientist (Soil Science)	Mizoram	ICAR-SBI, Karnal	04.09.2017
Dr. Brijesh Kumar	Scientist (Animal Reproduction)	Sikkim	ICAR-IVRI, Izatnagar	08.09.2017
Dr. Hemavati Ranebanneur	Scientist (Plant Pathology)	Tripura	ICAR-IARI, New Delhi	28.09.2017
		Technical		
Dr. Pulakabha Choudhury	SMS, T-6	Nagaland	KVK, Kachar	03.03.2017
Shri. Abhishek Kumar	SMS, T-6	KVK, Hailakandi	ICAR-RCER, Patna	31.08.2017
Shri. Rupesh Kr. Amarghade	STA, T-4	Hqs. Umiam	NIASM, Baramati	29.08.2017
		Administrative		
Shri. Gauranga Ghosh	FAO	Hqs. Umiam	CRIJAF,Barrrackpore	17.04.2017
Shri. K. C. Joshi	CAO	Hqs. Umiam	NRRI, Cuttack	29.04.2017

Scientists deputed abroad

Name & designation	Centre	Sponsored by	Period of deputation
Dr. M. R. Sahoo Sr. Scientist (Hort.)	Manipur	Biotechnology Overseas Associateship under Special programme for the Northeast	25.11.2016 to14.11.2017

Selection

Name	Designation	Date of promotion
Dr. A. K. Tripathi, Pr. Scientist & Head, Division of Social Science & Nodal Officer, KVK	Director, ATARI, Guwahati	09.05.2017

Superannuation

Name	Category	Centre/Estt.	Date of retirement
	Scientific		
Dr. Satish Chandra	Pr. Scientist	Hqs. Umiam	30.04.2017
	Technical		
Shri. L. Pachau	STA, T-4	Sikkim	31.05.2017
Shri. Birbal Rai	STA, T-4	Sikkim	30.06.2017
Shri. P. T. Yonzen	STA, T-4	Sikkim	31.07.2017
Shri. Prabin Medhi	TA, T-3	Hqs. Umiam	31.07.2017
Shri. Ashis Das Choudhury	TO, T-5	Hqs. Umiam	30.09.2017
	Administrative		
Smti. B. Mowlong	AO	Hqs. Umiam	30.06.2017
Shri. K. Jugin Singh	SSS	Manipur	30.09.2017
Shri. Jadav Ch. Das	SSS	Hqs. Umiam	30.09.2017

Staff passed away in harness

Name	Designation	Centre	Date of death
Shri. (L) K. S. Suting	STA, T-4	Hqs. Umiam	25.08.2017
Shri. (L) Thomlin Dkhar	UDC	Hqs. Umiam	01.05.2017
Smt. (L) Akhom Yaimabi Devi	SSS	Manipur	21.05.2017

Compiled and Edited by
Dr G. T. Behere, Dr Pankaj Baiswar, Dr H. Rymbai and Dr S. Ruth Assumi
Published by Director, ICAR-ICAR Research Complex for NEH Region, Umiam – 793 103, Meghalaya.
Telephone : 0364 – 2570257, FAX : 0364 – 2570355
E - Mail : directoricar-neh@icar.gov.in Website : www.icarneh.ernet.in